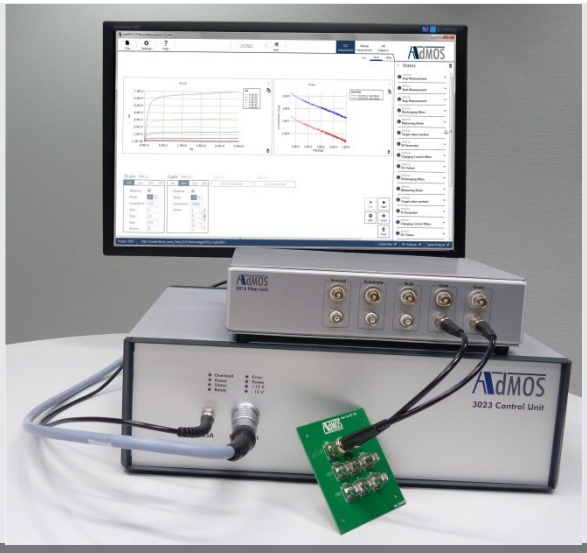

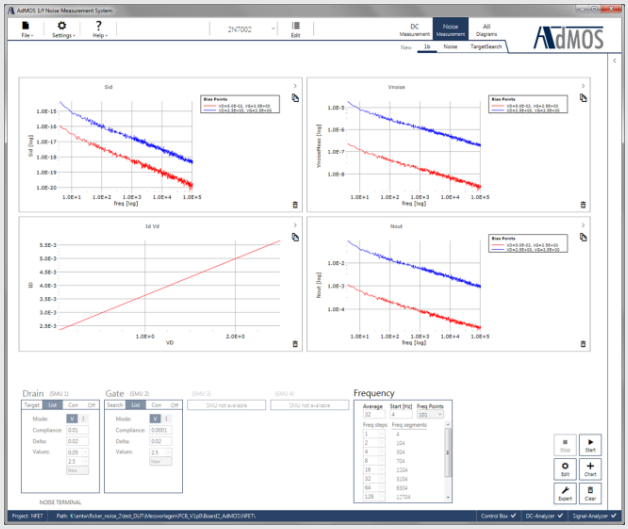

3002A Flicker Noise Measurement System

Features

The AdMOS 3002A Flicker Noise Measurement System is a state-of the art solution to characterize 1/f noise of electronic devices.

It consists of a 3012 Filter Unit, which is placed closely to the device under test (DUT), and a 3023 Control Unit to link the system to the host computer and to sample the noise signal. Distortions which influence the measurement accuracy are minimized by this concept.

Ready to use flexible templates allow the measurement of FETs (CMOS, HVMOS, OTFT, ..), BJTs, diodes, resistors and other devices on-wafer or as discrete devices. Moreover, circuits like operational amplifiers can be measured as well.

By default, the system automatically selects the optimum setting for the most accurate noise measurement depending on the bias condition of the DUT. However, users can change this behavior to focus on measurement speed.

The system is controlled by the new and intuitive AdMOS Flicker Noise Measurement Software on a Windows PC.

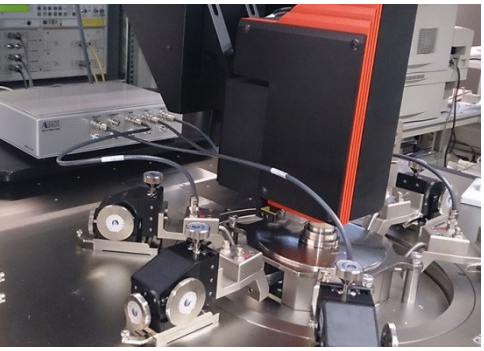

3012 Filter Unit

The filter unit consists of 4 high quality low pass filters with corner frequencies below 0.05 Hz to remove distortions coming from the DC analyzer and the overall environment.

Applying this scheme to drain, gate, bulk and substrate enables measurements on HV MOS devices in high side operation mode.

The values of filter resistance and the measurement resistance in the noise terminal can be adjusted in a wide range to account for different bias conditions and DUT conductance. The accuracy of the DC bias voltage at the noise terminal is verified during the noise measurement cycle through a separate SMU.

Flicker noise is measured as the noise voltage over selectable measurement resistors and amplified by an ultra-low noise voltage amplifier with variable gain selection.

Switchable inputs enable simultaneous DC and noise measurements with only one connection to the DUT.

The fully shielded enclosure is designed to be placed close to the DUT to minimize distortions in measurement cables between the DUT and the filter unit. During the noise measurements, all digital electronic in the filter is in sleep mode.

Technical Data

Frequency range: 0.1Hz – 10MHz,
DC biasing: ±50V, •± 50mA (depending on DC analyzer capability)
Noise behavior of low noise amplifier:
17nV / √Hz@1Hz 2.0nV / √Hz@100Hz 1.0nV / √Hz@1kHz
Noise current below 50fA/√Hz

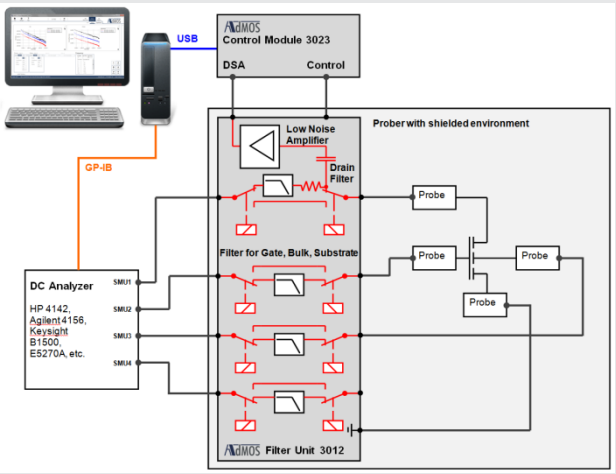

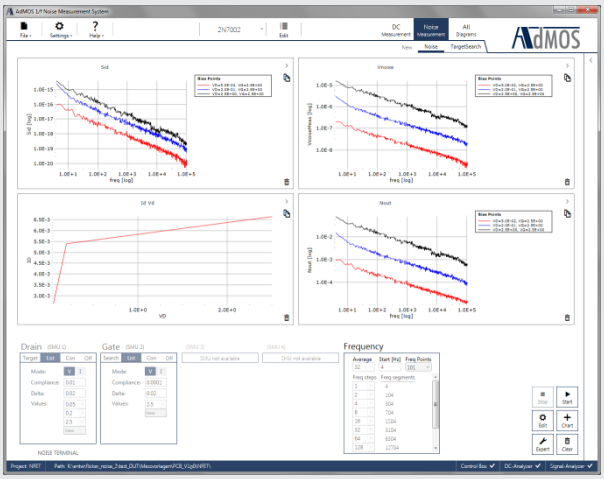

3002A FLICKER NOISE MEASUREMENT SYSTEM

3023 Control Unit

The Control Unit supplies power to the Filter Unit, controls all operations of the system and contains an advanced digitizer to collect the noise signal with a sampling rate up to 400MSPS. It can be selected for 120V or 230V power supply. The Control Unit communicates via a USB2.0 connection to the host computer.

Software

The intuitive Graphical User Interface is designed in a modern style and focuses on ease of use. It supports the automatic detection of all supported instruments.
Different measurement modes are supported:

- Set constant voltages or currents
- Automatic search for defined currents / voltages

Diagrams can be configured with respect to their content and arrangement. Easy plot generation for reports.
Built in selftest routine.
Measurement results are saved in ASCII file format and can be directly imported to common modeling programs or into MicrosoftR Excel.

Quick Start

To enable a quick and efficient start, AdMOS provides ready to use measurement templates for all common devices (FET, BJT, diode, resistor) together with a Quick Start Guide.
A specially designed test board with discrete devices makes it easy to do the first steps in noise measurements using the built-in templates.

AdMOS GmbH
Advanced Modeling Solutions
In den Gernackern 8
72636 Frickenhausen | Germany
Phone +49 7025 911698-0
Fax +49 7025 911698-99
info@admos.de
www.admos.de

Further products and services

Customized measurement cables

AdMOS can provide a complete set of measurement cables including customized low noise cables to connect the 3002A system to the measurement instruments and to any kind of test fixture or probe manipulator. Please ask us for the customized cable specification.

Training and System Integration

Training and system integration can be done at customer's site. Special training sessions are available in the AdMOS characterization laboratory.

System Prerequisites

Supported Instruments:

Parameter Analyzer	Supported Units
HP4142B	41420A High Power SMU 41421B Medium Power SMU
HP4145B	internal
B1500A	B1510A High Power SMU B1511A/B Medium Power SMU B1517A/B High Resolution SMU
HP4156B/C	internal
E5270B	E5280B High Power SMU E5281B Medium Power SMU E5287A High Resolution SMU

Additional instruments can be added upon request.

GPIB Interfaces:

Keysight Technologies GPIB interfaces, e.g. 82357B USB/GPIB Interface with IO Libraries.

Host computer running Windows® 7/8/10 with a display resolution of at least 1368x768 and two USB2.0 ports.

Safety and EMC compliance according to European EC directive.

© 2017 AdMOS GmbH Advanced Modeling Solutions